# SparkleLite™ PAR30

## Dimensions

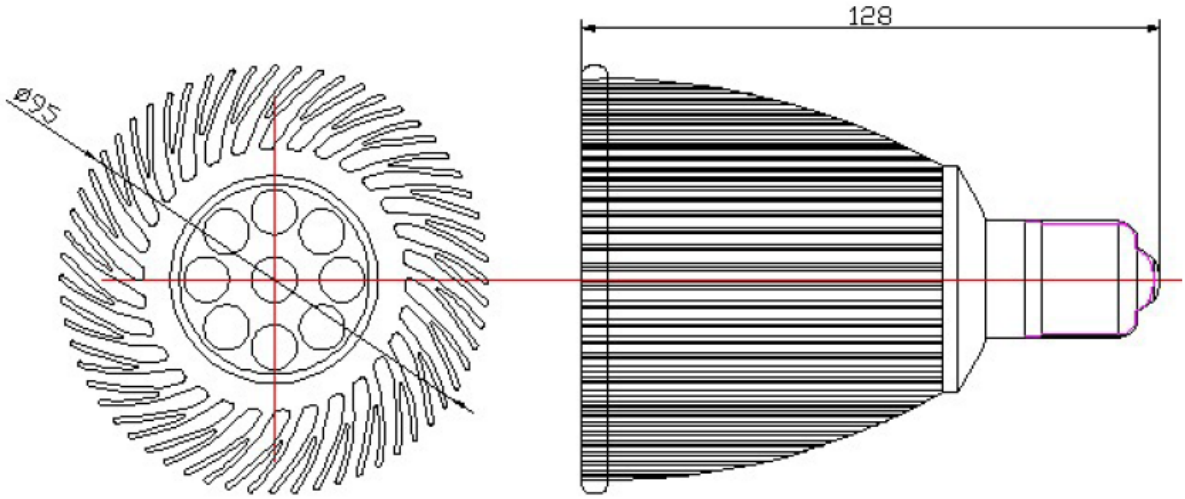


Unit: mm

Tolerance: ±2.5 mm

8580 Avenida de la Fuente Suite F, San Diego, CA. 92154. Phone: 619-661-0628. Toll Free 1-800-258-6230
www.mkdigitaldirect.com info@mkdigitaldirect.com

## Specifications

- BUIB TYPE：PAR30 9X1W
- BASE TYPE：E27
- INPUT VOLTAGE：AC85~260V with reversed polarity protect
- INPUT POWER：11.0W
- OUTPUT POWER：9.0W
- TOTAL LENGTH：128MM
- BEAM ANGLE：40 degrees
- REFLECTOR EFFICIENCY：85%
- LIGHT SOURCE：9X1W hight power LED
- LED OUTPUT CURRENT：320mA
- BODY TEMPERATURE：<55°C
- LED WORKING TEMPERATURE：-20°C ～ 50°C
- FULL RANGE OF COLORS：cool white, warm white, blue, green ,red,yellow,RGB
- NET WEIGHT：455g
- ALUMINIUM HOUSING
- NO UV OR IR RADIATION
- SAFETY ASSURANCE：CE&RoHS

## Illuminance and Beam Angles

| part no. | LED Brand | Color | wavelength/CCT (nm/K) | Luminous Flux (LM) | Power | Color-rendering index | Light Effect (lm/W) |
|---|---|---|---|---|---|---|---|
| 02031-001 | Cree | cool white | 5000-7000K | 609.2 | 11.1 W | 75 ~ 80 | 54.7 |
| 02031-002 | | Nature white | 3500-5000K | 523.9 | 11 W | 80 ~ 85 | 47.5 |
| 02031-003 | | warm white | 2700-3500K | 523.9 | 11 W | 80 ~ 85 | 47.5 |

**Cool white**

## CIE Parameter:

| | | |
|---|---|---|
| Coordinate: x=0.3222, y=0.3515 | CCT: Tc=5918 K | Purity=3.8% |
| u=0.1961, v=0.3208 | Main Wave=515.1nm | Peak Wave=450.0nm |
| Half Width=27.4nm | Red Ratio=13.5% | Chromatism SDCM=2.5 |

Color rendering property :Ra=73.9

| | | | | |
|---|---|---|---|---|
| R1=69 | R2=79 | R3=85 | R4=72 | R5=71 |
| R6=71 | R7=85 | R8=59 | R9=-29 | R10=49 |
| R11=68 | R12=44 | R13=71 | R14=91 | R15=64 |

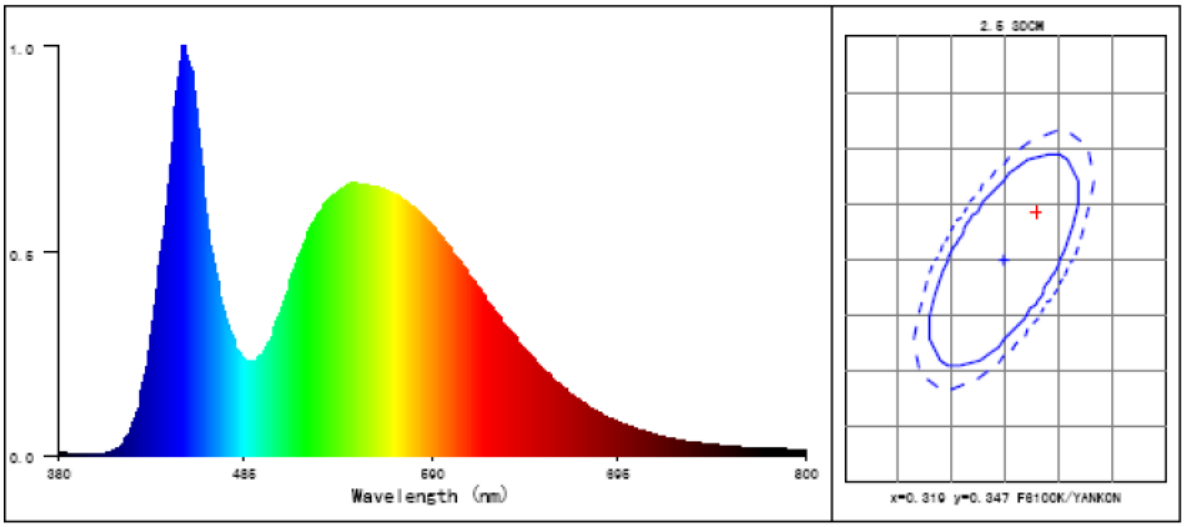


## Other parameters:

| | | | |
|---|---|---|---|
| Flux: Φ=609.2 Lm | Efficiency: Effi=54.7 Lm/W | Stability: %=1.0 % | THD= 0.0% |
| Voltage: U=220.3 V | Current: I=0.103 A | Power: P=11.1 W | Power factor: PF=0.490 |

**40°cool white**

## Photometric Results

Lumens 532.70 lm

Efficiency 98.65 %

Central Intensity: 1754.000 cd

Maximum Intensity: 1770.400 cd

Angle of maximum intensity: C: 80.0 G: 1.8

Half Peak Side Left: -14.4 Right: 12.6

Beam Angle(10%): Left: -21.6 Right: 21.6

Light Distribution Curve C0/C180

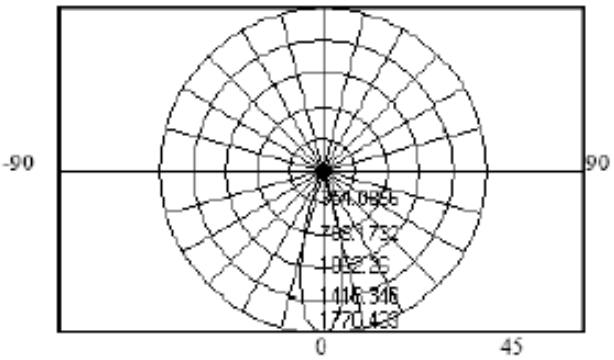


Light Distribution Curve C90/C270

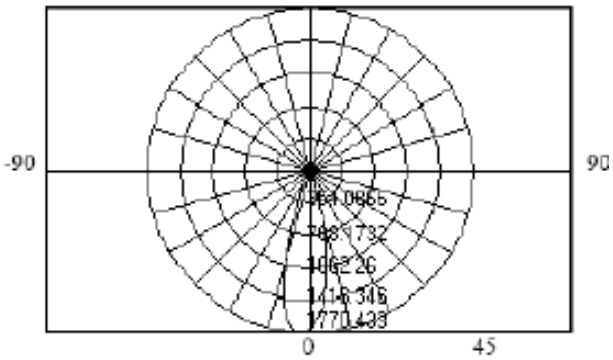


| H[m] | Diameter[m] | Illuminance[lx] |
|---|---|---|
| 0.60 | 0.29 | 4888.1 |
| 1.20 | 0.59 | 1222.0 |
| 1.80 | 0.86 | 543.1 |
| 2.40 | 1.15 | 305.5 |
| 3.00 | 1.44 | 195.5 |

Half peak angle: 2 x 13.5°à C0-C180

| H[m] | Diameter[m] | Illuminance[lx] |
|---|---|---|
| 0.60 | 0.29 | 4788.7 |
| 1.20 | 0.59 | 1197.2 |
| 1.80 | 0.86 | 532.1 |
| 2.40 | 1.15 | 299.3 |
| 3.00 | 1.44 | 191.5 |

Half peak angle: 2 x 13.5°à C90-C270
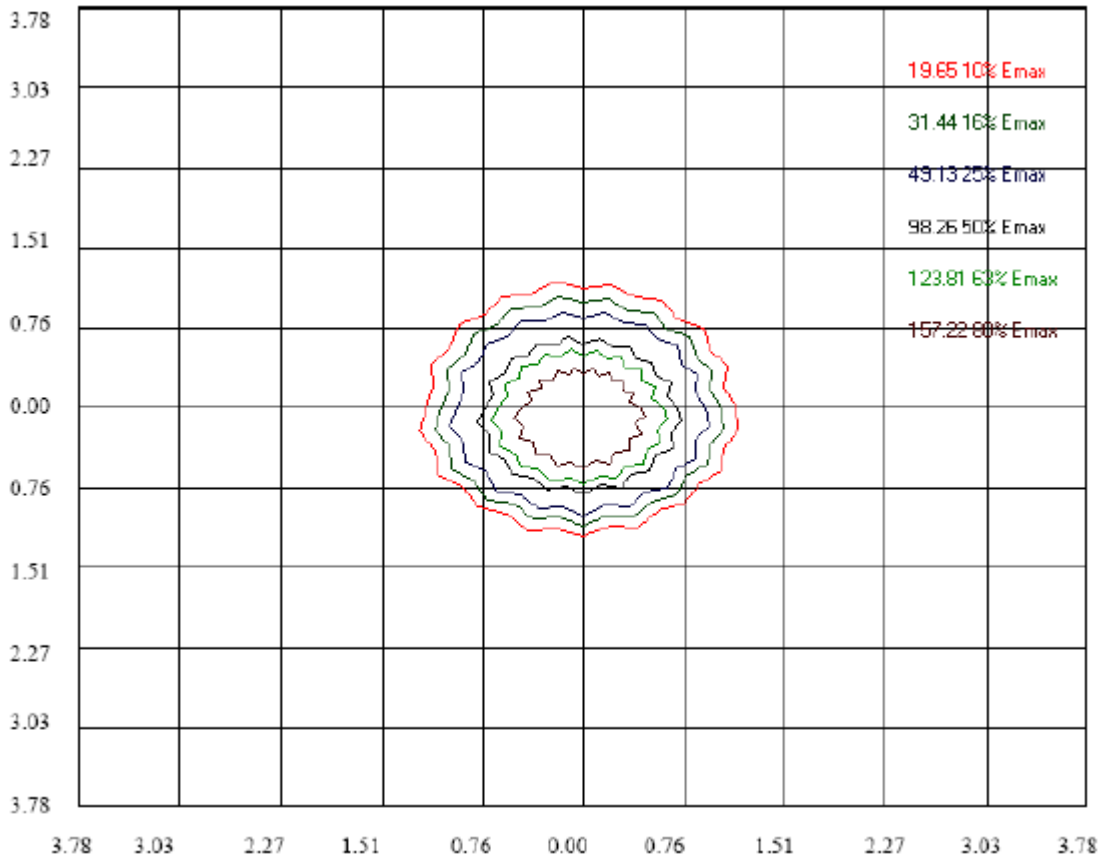
## Illumination map